Measuring Antenna & Transmission Line Performance

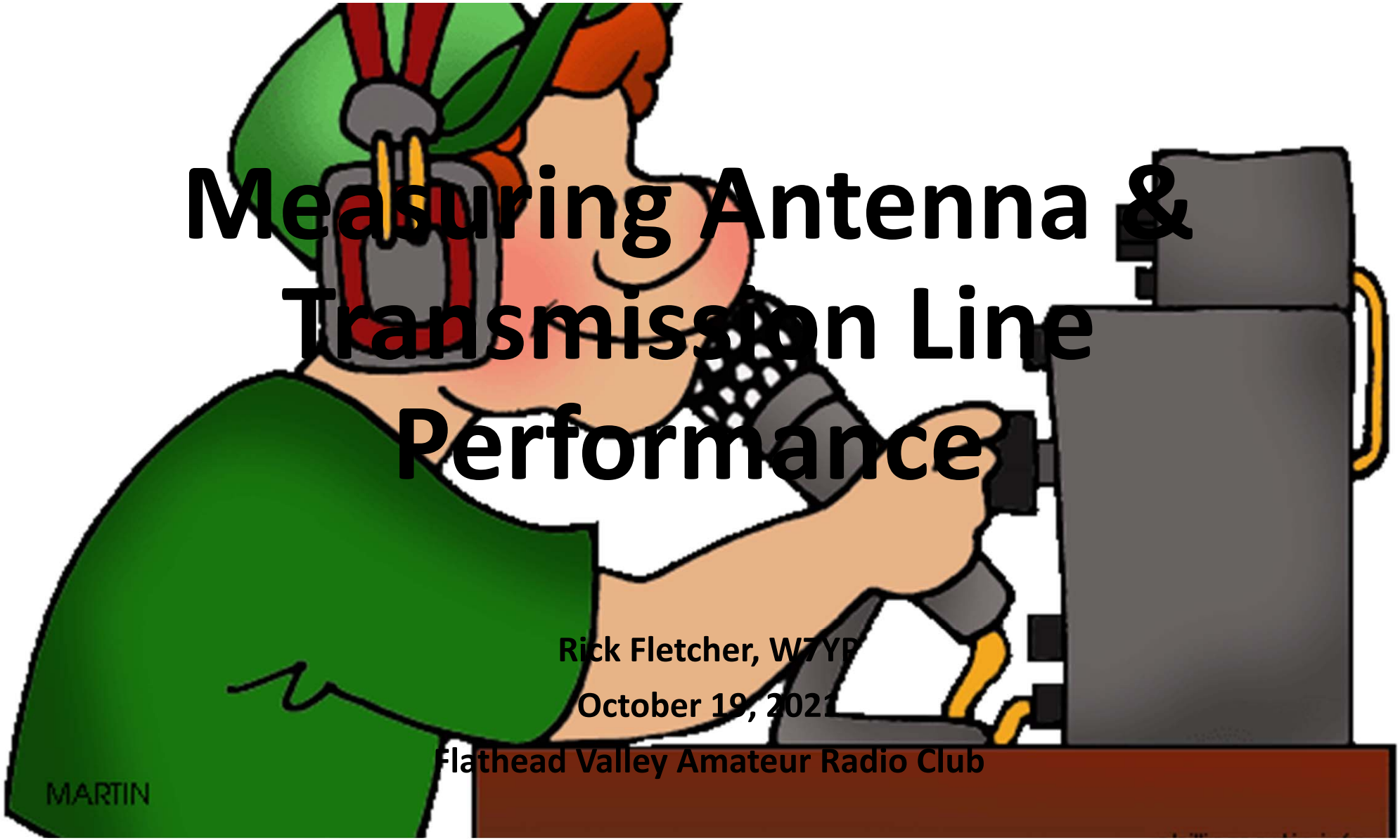

Rick Fletcher, W7YP

October 19, 2021

Flathead Valley Amateur Radio Club

What is SWR?

Graphical Representation of Standing Waves

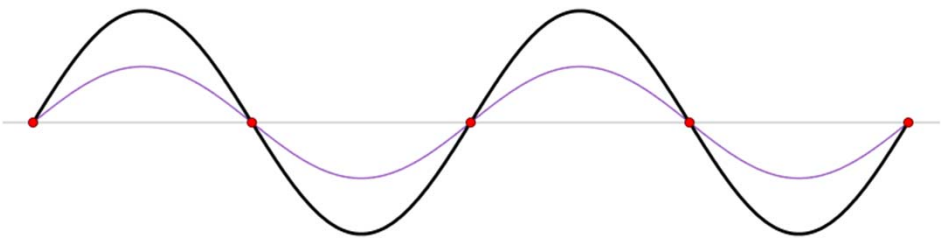

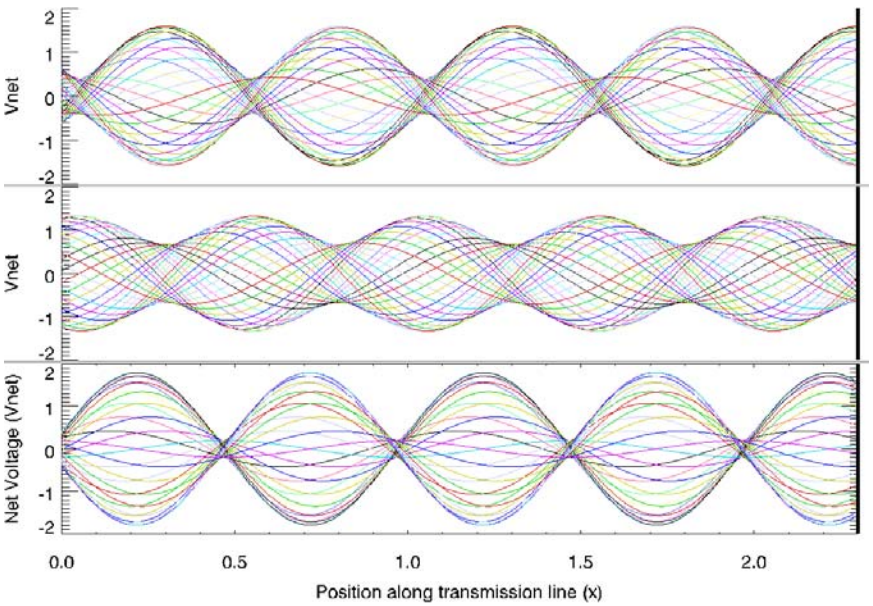

Antenna Measurements

- SWR = Standing Wave Ratio, more correctly called Voltage Standing Wave Ratio (VSWR)
- Measures the impedance match between the transmitter (source) and the antenna (load)
- A perfect match is an SWR of 1.0 (1:1)
- SWR is ALWAYS ≥ 1.0
- Example:
  - VF = 10 W
  - VR = 5 W
  - SWR = (10 + 5) / (10 – 5) = 15/5 = 3

$$SWR = \frac{V_{max}}{V_{min}} = \frac{V_F + V_R}{V_F - V_R}$$

The Fundamental Measurement

What is the impedance looking into this port?

$Z = R + jX$

$SWR = Z_L/Z_0$ or Z_0/Z_L

whichever is ≥ 1, for Z_L real

Example:
What is the SWR with Z_L=100Ω ?
SWR = 100/50 = 2

ρ = reflection coefficient= V_R/V_F

RL = return loss (dB) = -20 log (ρ)

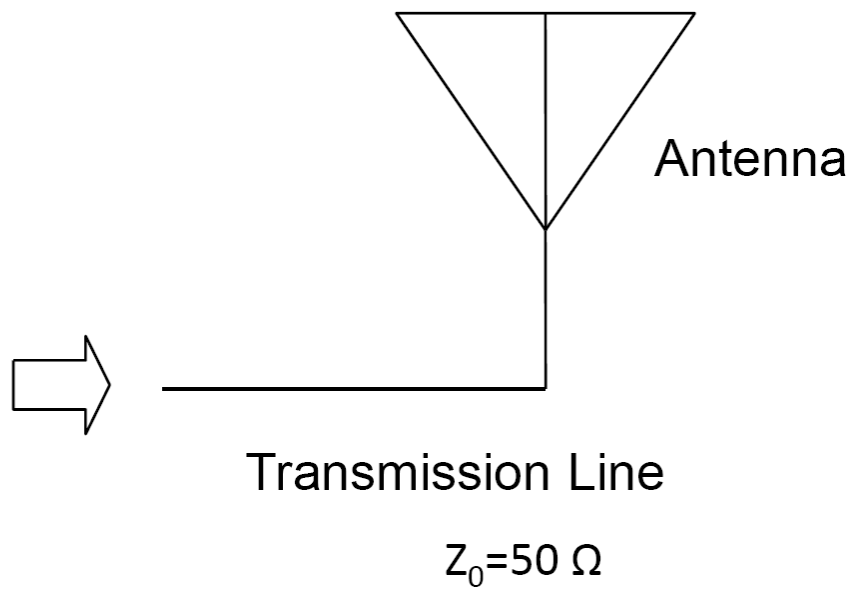

SWR, Return Loss and Efficiency

Return Loss (dB)	Reflected Pwr (%)	Forward Power (%)	Mismatch Loss (dB)	VSWR	Reflection Coefficient
0.00	100.00	0.00	∞	∞	1.00
1.00	79.43	20.57	6.87	17.39	0.89
2.00	63.10	36.90	4.33	8.72	0.79
3.00	50.12	49.88	3.02	5.85	0.71
4.00	39.81	60.19	2.20	4.42	0.63
5.00	31.62	68.38	1.65	3.57	0.56
6.00	25.12	74.88	1.26	3.01	0.50
7.00	19.95	80.05	0.97	2.61	0.45
8.00	15.85	84.15	0.75	2.32	0.40
9.00	12.59	87.41	0.58	2.10	0.35
10.00	10.00	90.00	0.46	1.92	0.32
12.00	6.31	93.69	0.28	1.67	0.25
15.00	3.16	96.84	0.14	1.43	0.18
20.00	1.00	99.00	0.04	1.22	0.10
30.00	0.10	99.90	0.00	1.07	0.03
∞	0.00	100.00	0.00	1.00	0.00

Measuring SWR With Lossy Transmission Line

- SWR is constant along the transmission line if it is essentially lossless
  - Example: “open wire” or “ladder line”
- With a significant impedance mismatch between the transmitter and the antenna, coax will quickly become lossy
  - The greater the impedance mismatch, the more losses will occur
  - This creates a situation where to get an accurate SWR reading, WHERE in the transmission path you make your measurement is critically important
    - Measured SWR will decrease the further you get away from the load
      - A long run of lossy coax may leave the source (TX) end oblivious to the actual mismatch at the load end
        - Some antenna designs fake a good SWR at the radio by specifying a particular length of coax for the frequency of operation
  - To get the most accurate SWR measurement, it should be taken at the load rather than in the shack

Typical Shack SWR Measurement Setup

- Transceiver has built-in SWR measuring capability
- An external SWR meter is used:

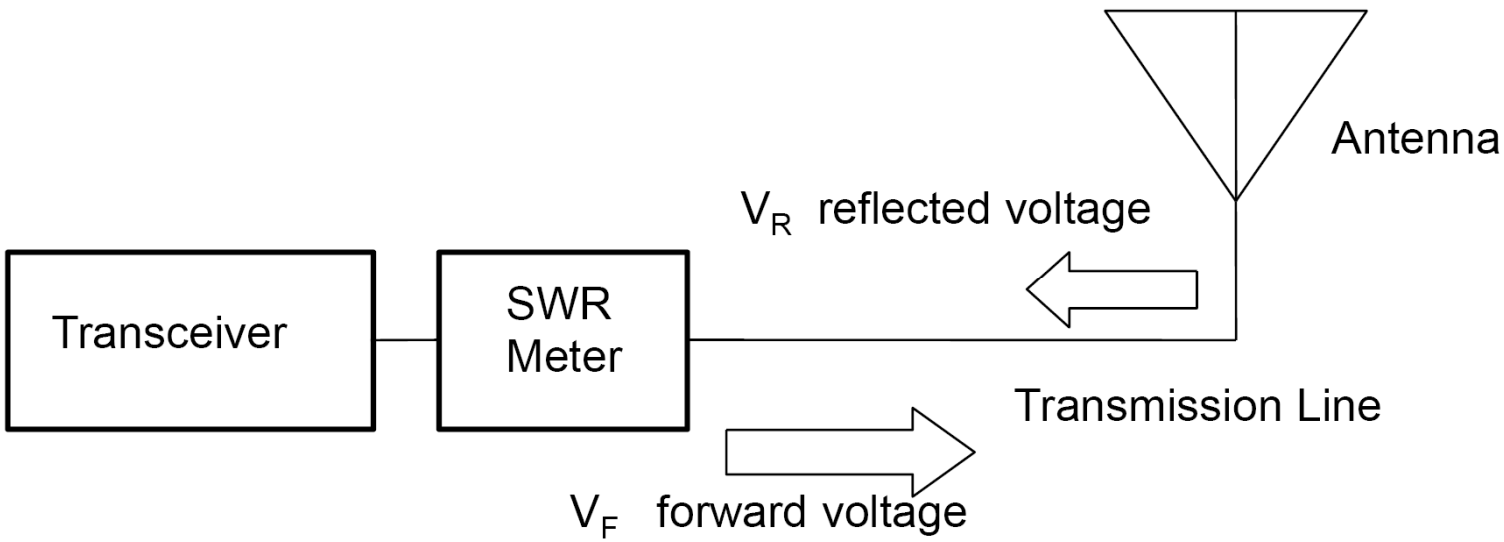

Inside An SWR Meter

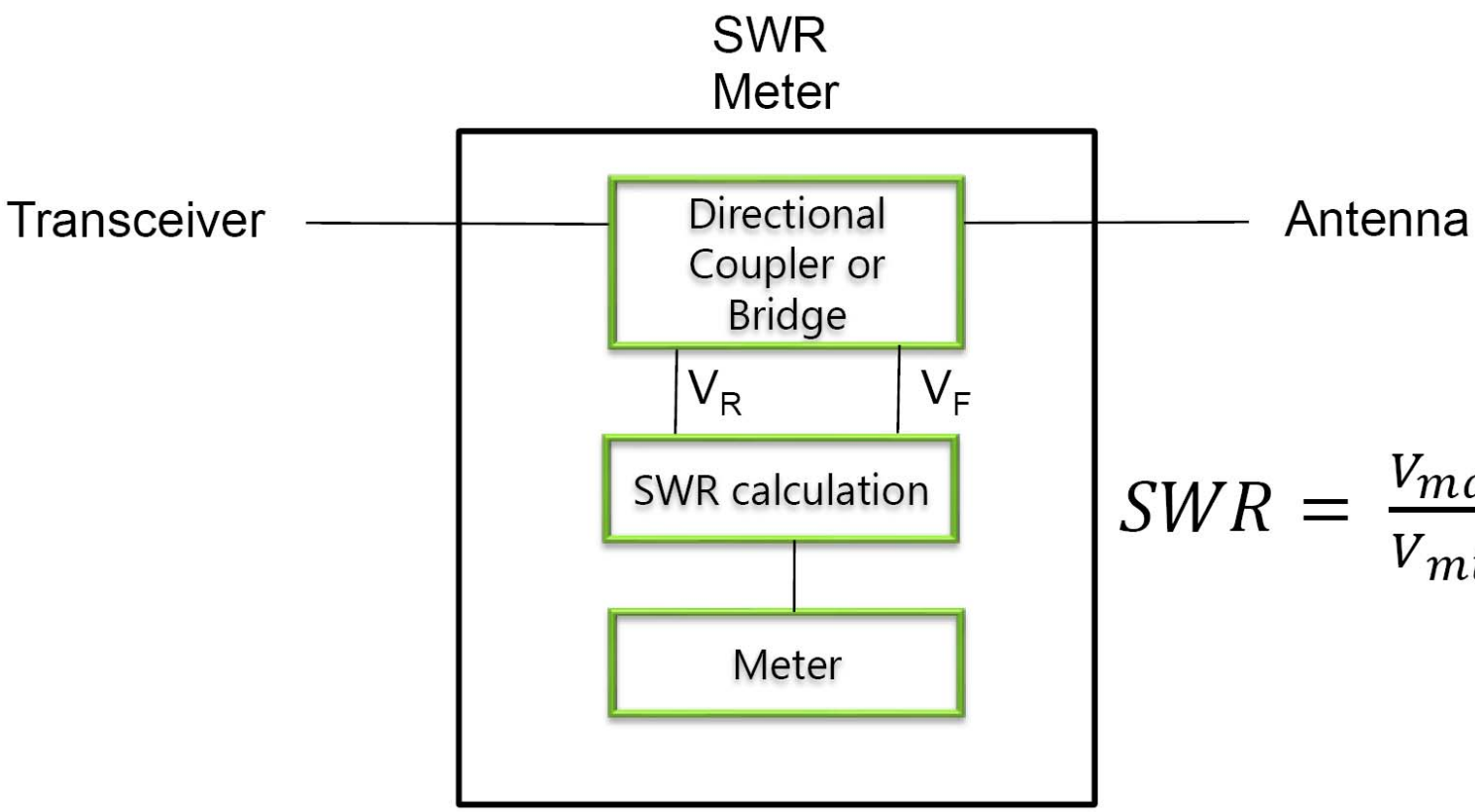

$$SWR = \frac{V_{max}}{V_{min}} = \frac{V_F + V_R}{V_F - V_R}$$

SWR Meters With Remote Measurement

- Use remote sensors which can be placed anywhere in the transmission path, preferably at the load (antenna)
- A display console is placed in the shack with one or more of the remote sensors connected to it
- User responsible for weatherproofing

WaveNode WN-2

- Sensors covering 100 kHz to 1.3 GHz
- Display shows Peak, Average Power and SWR
- Accuracy +/- 5%
- USB connection to Windows PC
- Software features:
  - Modulation oscilloscope
  - Spectrum Analyzer
  - Tone generator
  - Voice and tone announcing of power and SWR for the visually impaired
- $385 with 1 sensor
- https://wavenodedevelop.com/controllers/wavenode-wn-2/

WaveNode Modulation Scope

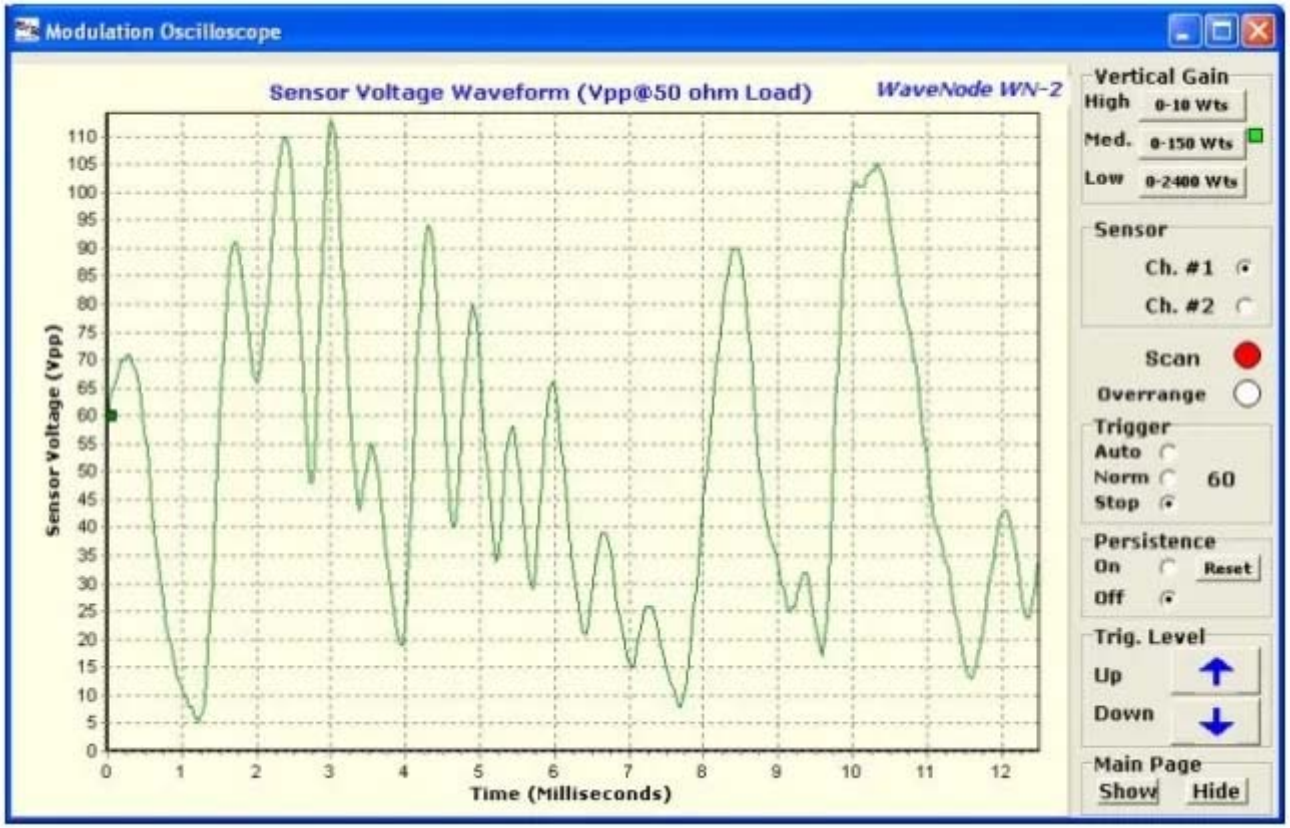

WaveNode Spectrum Analyzer

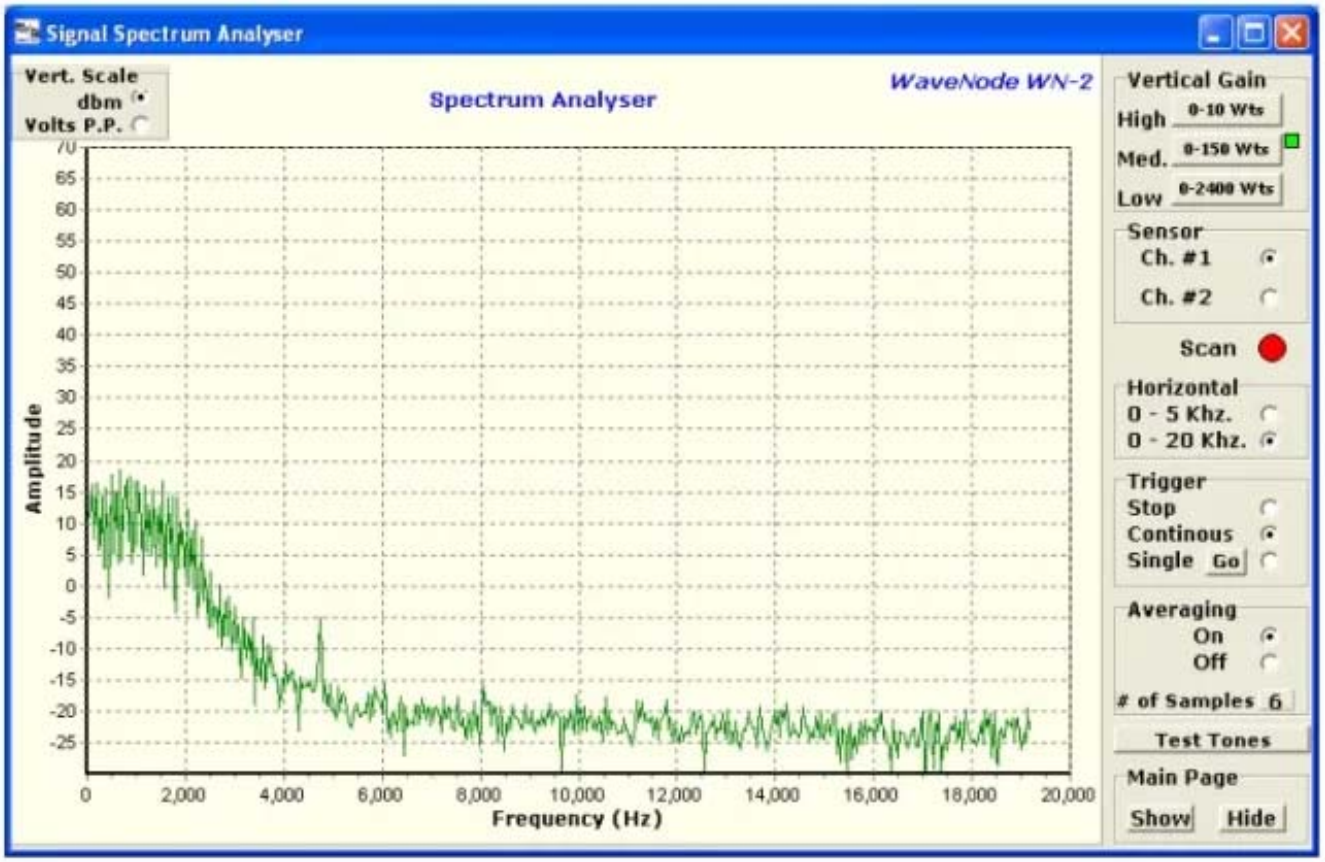

LP-500

- Bright 5” color TFT Display, 800 x 480 resolution
- Touchscreen controls of all functions
- High speed ADCs with adjustable oversampling
- Native USB interface (no Windows drivers needed)
- Virtual meter Windows program
- SWR protection for 2 amplifiers
- Sensors cover HF and 6m
- $650 (sensors extra)
- http://www.telepostinc.com/LP-500.html

LP-500 Main Display

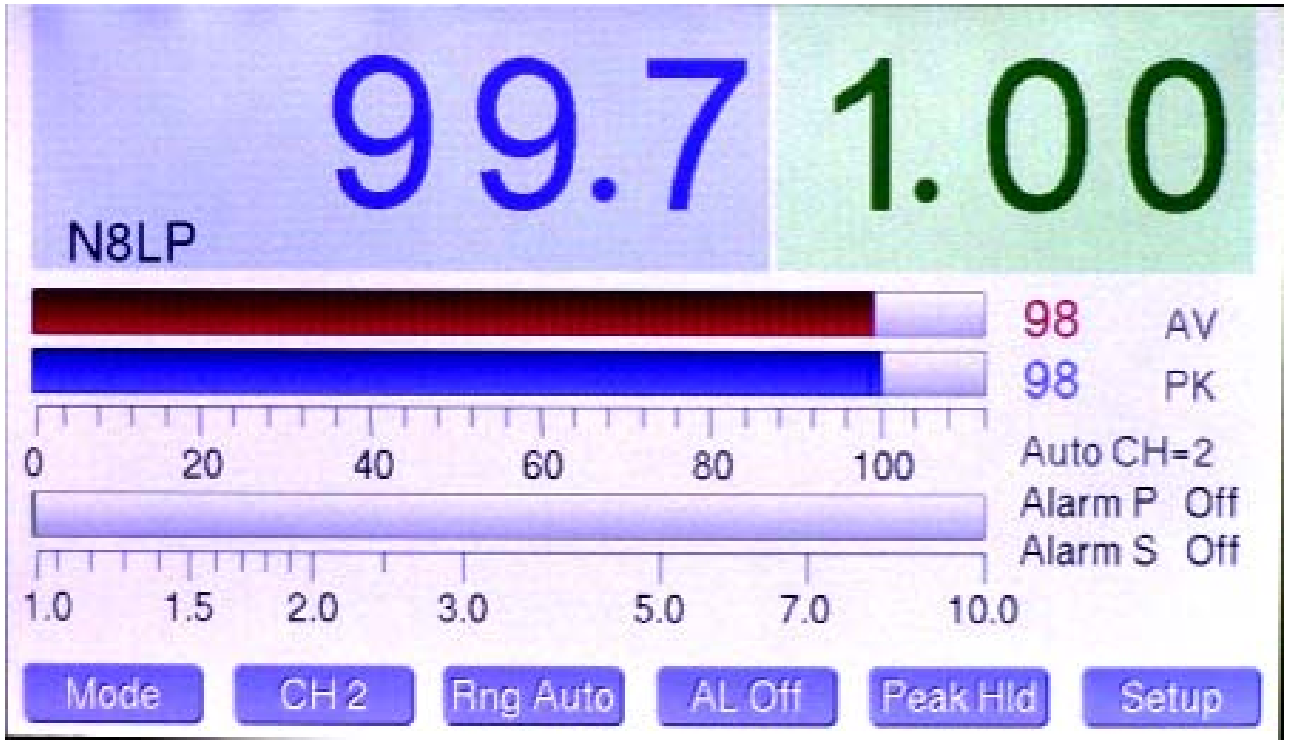

LP-500 Waveform Display

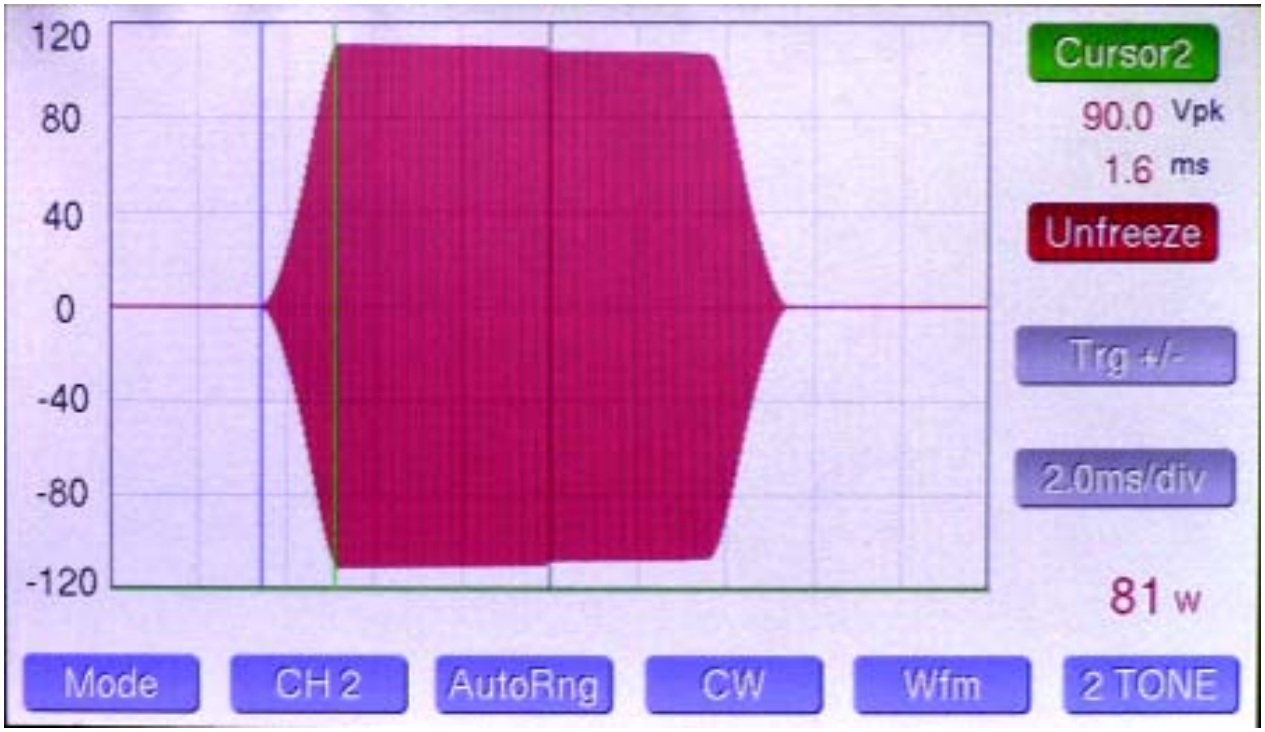

LP-500 Half Trapezoid Showing Amp Overdrive

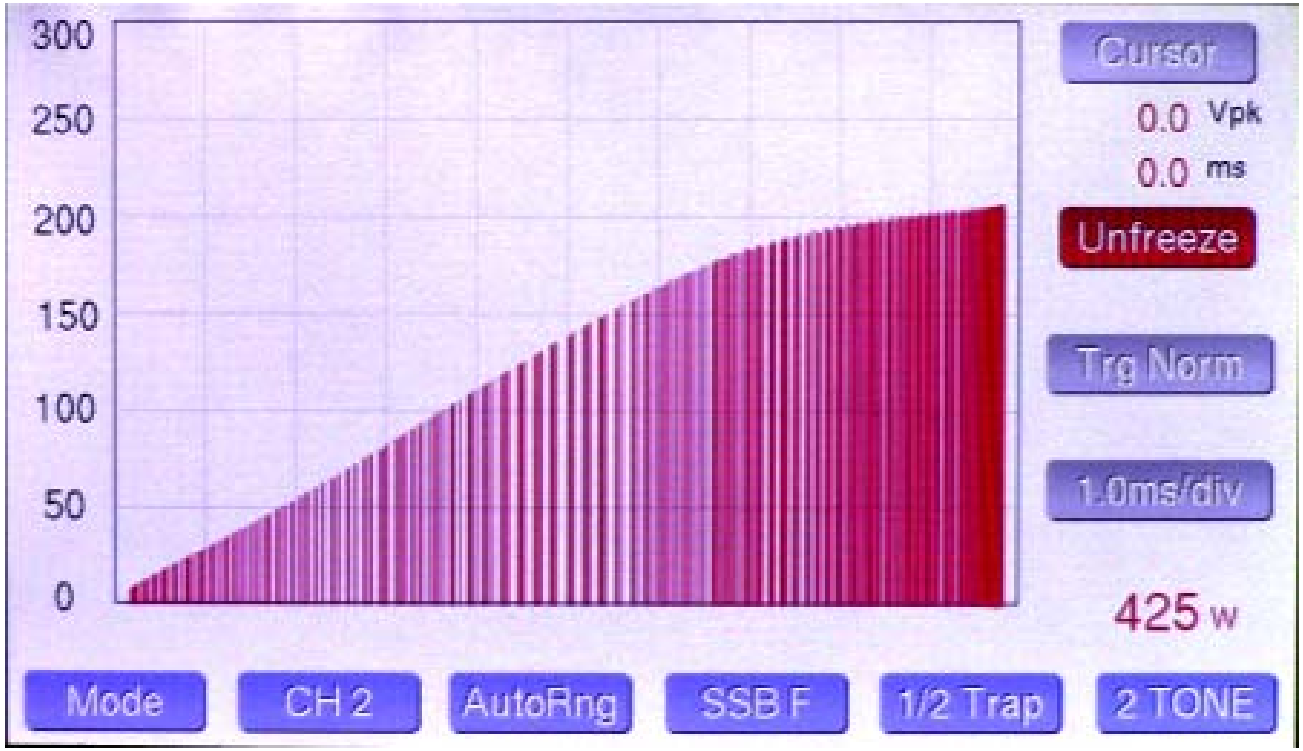

LP-500 Trapezoid with Power/SWR Split Screen

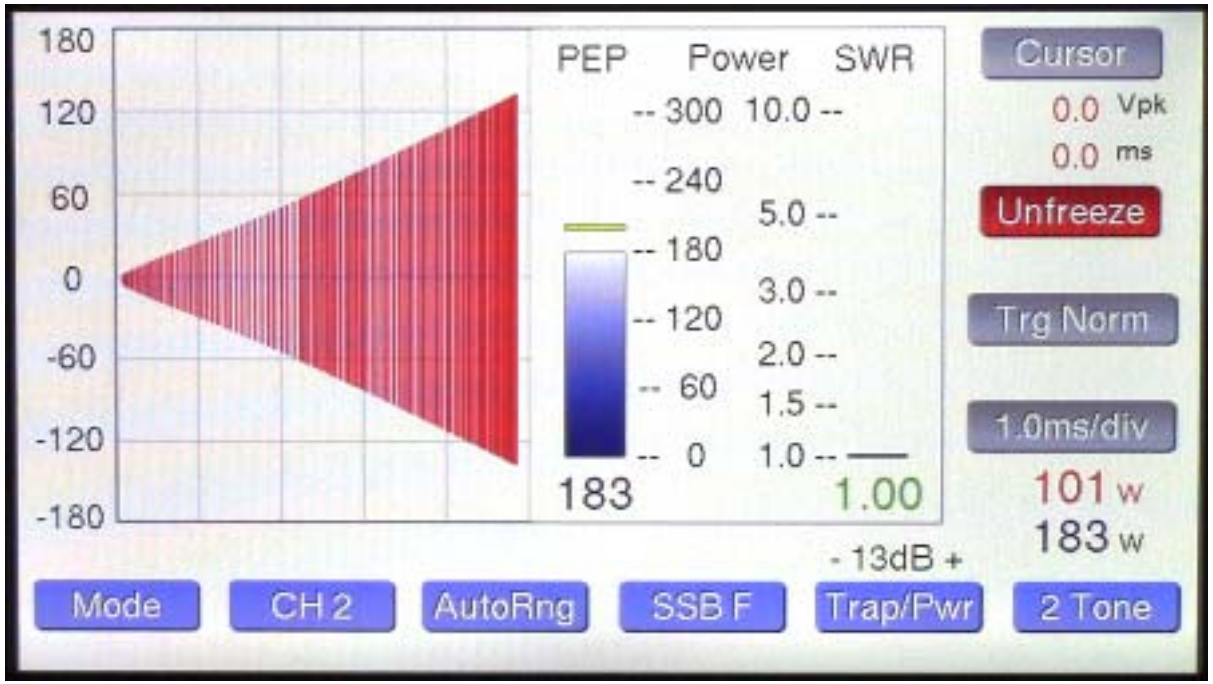

LP-500 Two-Tone IMD Test

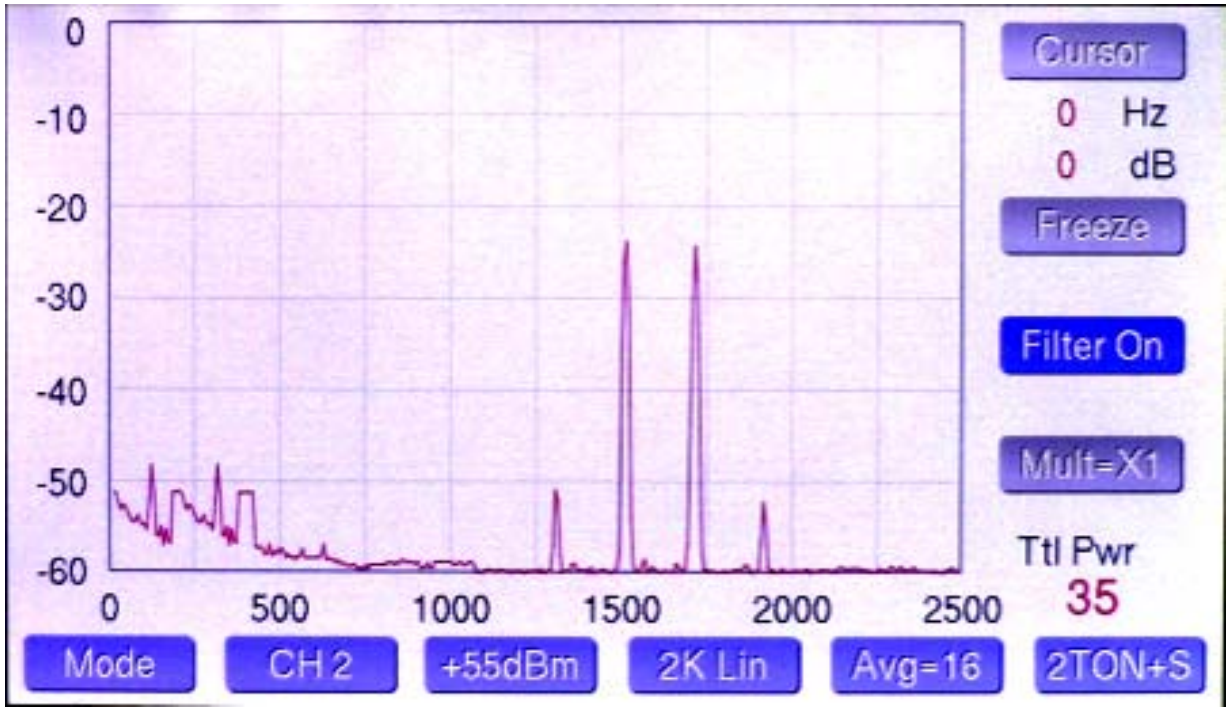

Trick Question

- What's the easiest way to get a perfect SWR?
- Hook the transmitter to an impedance-matched dummy load
  - Not a good radiator, but the transmitter is happy
- A good SWR doesn't necessarily mean that your antenna is an effective radiator
  - Many compromise antennas use 'tricks' to present a good SWR at the radio while not being effective radiators


Q & A
MARTIN